HIETAKARI®

CE

8/25 0ZRLM

513



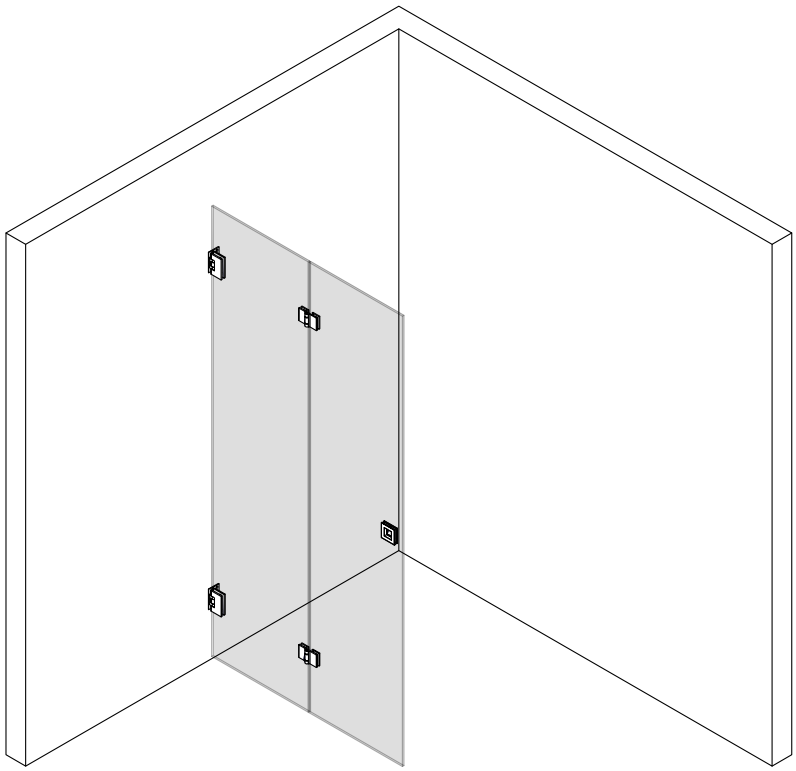



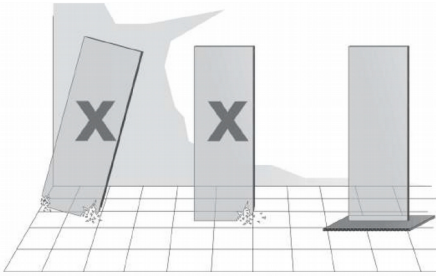

Parts

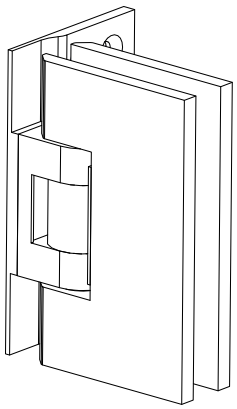

1. x2

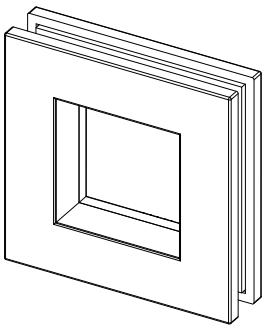

2. x1

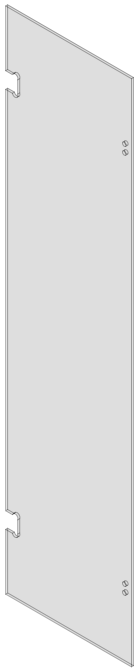

3. x1

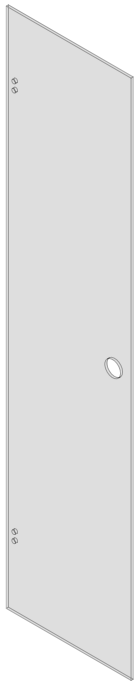

4. x1

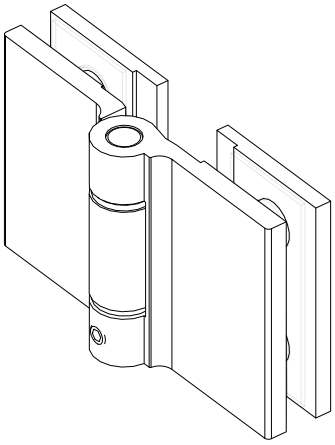

5. x1

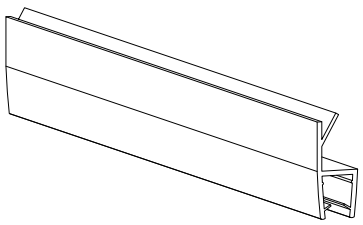

6. x1

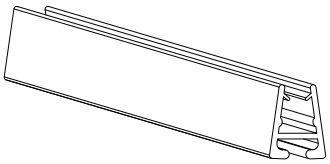

7. x1

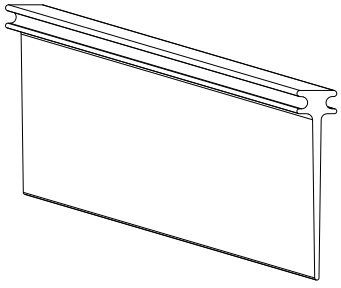

8. x1

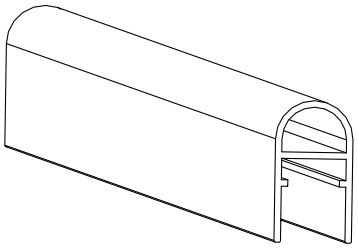

9. x1

Tools

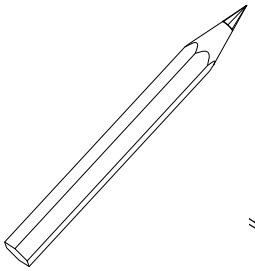

A

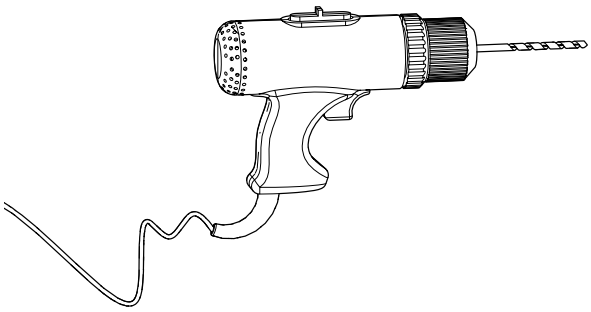

Ø8 mm
B

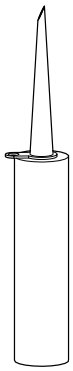

C – Silicone

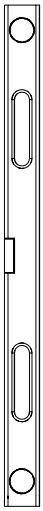

D

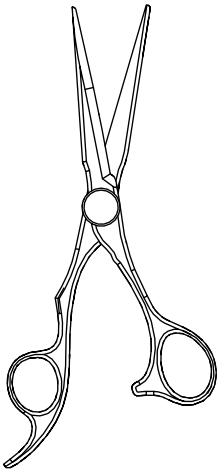

E

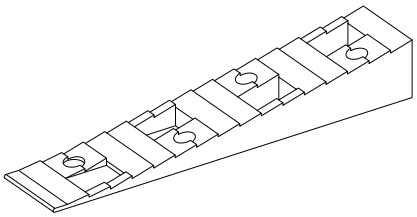

F

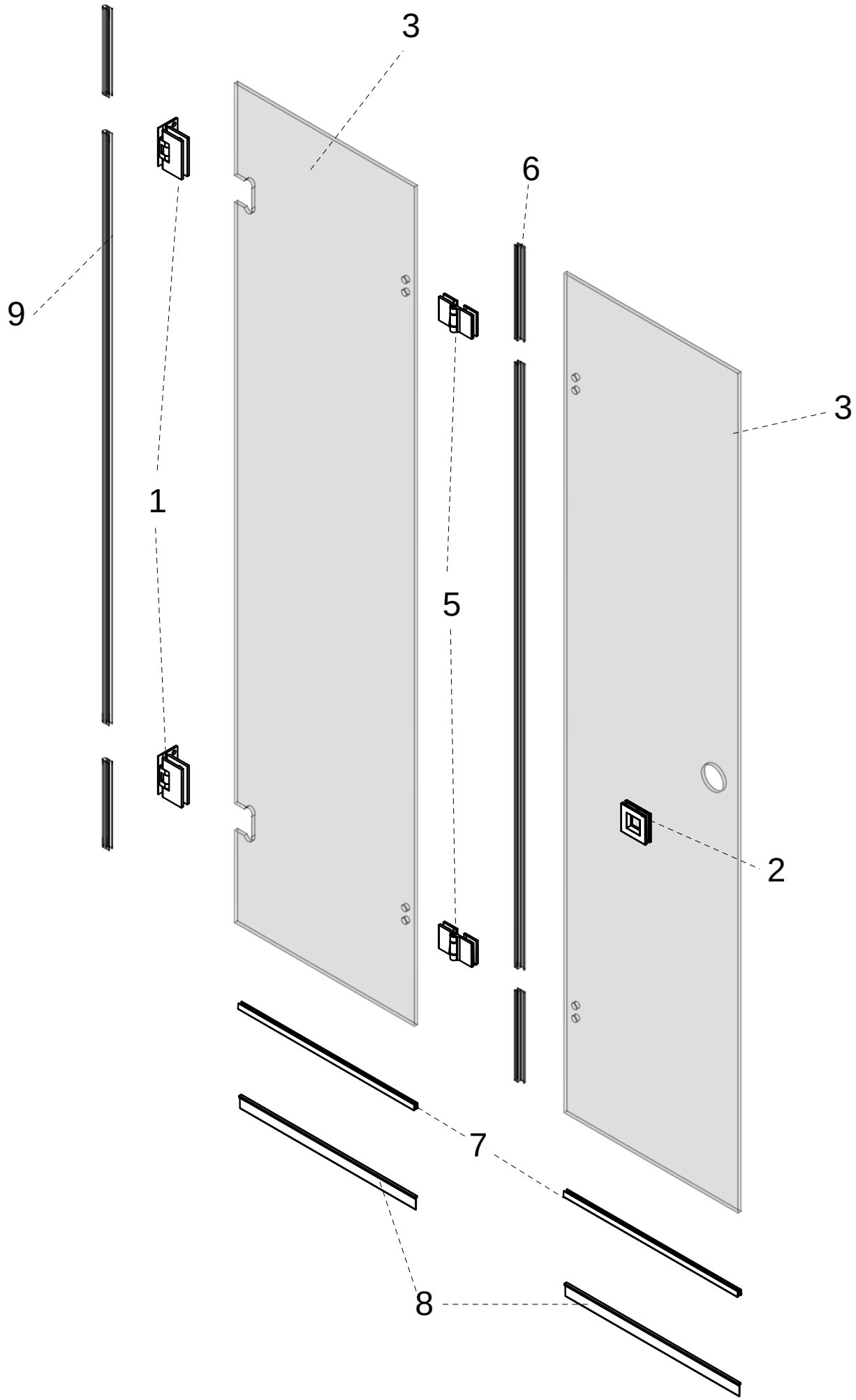
3
6
9
1
5
3
2
7
8

1

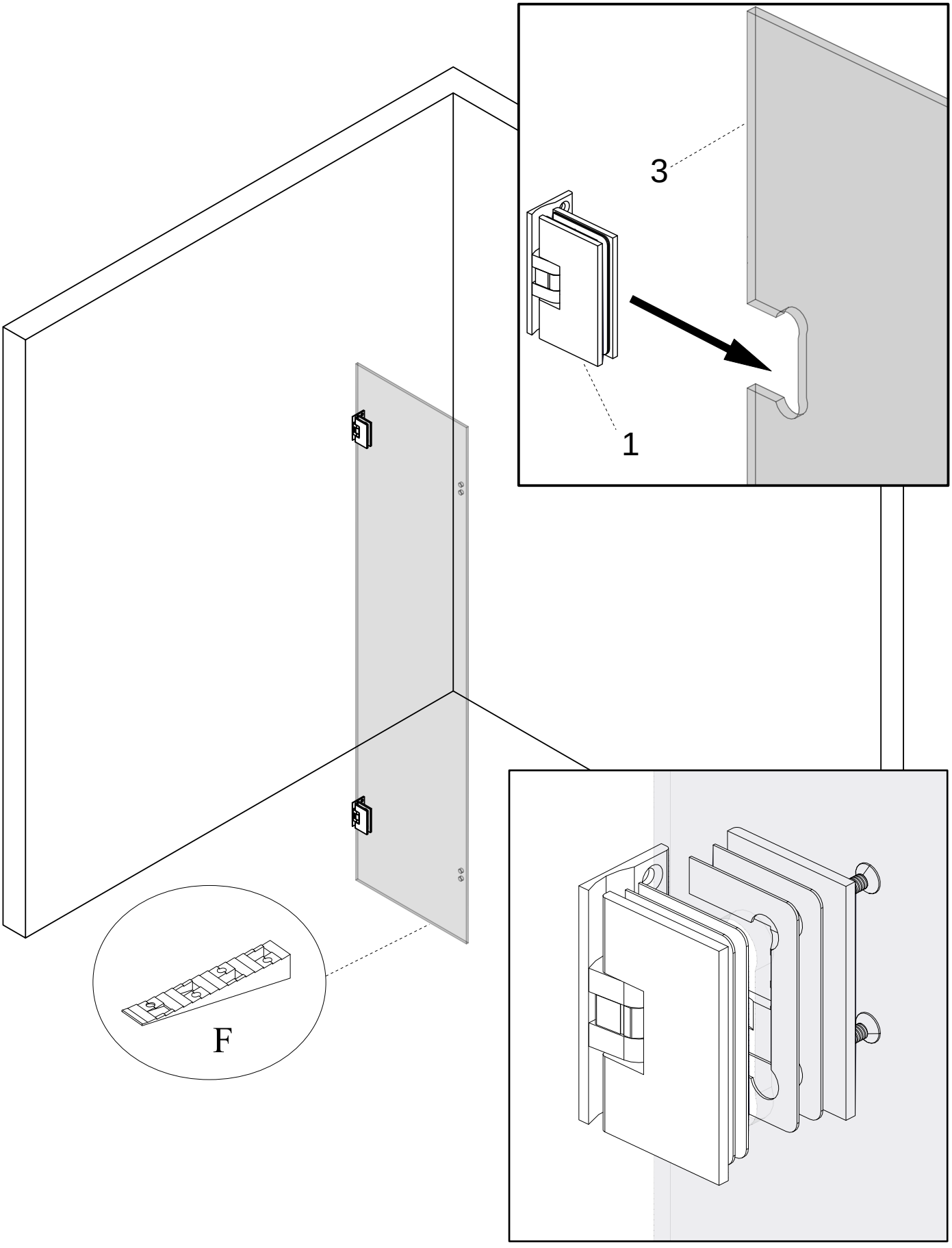

2

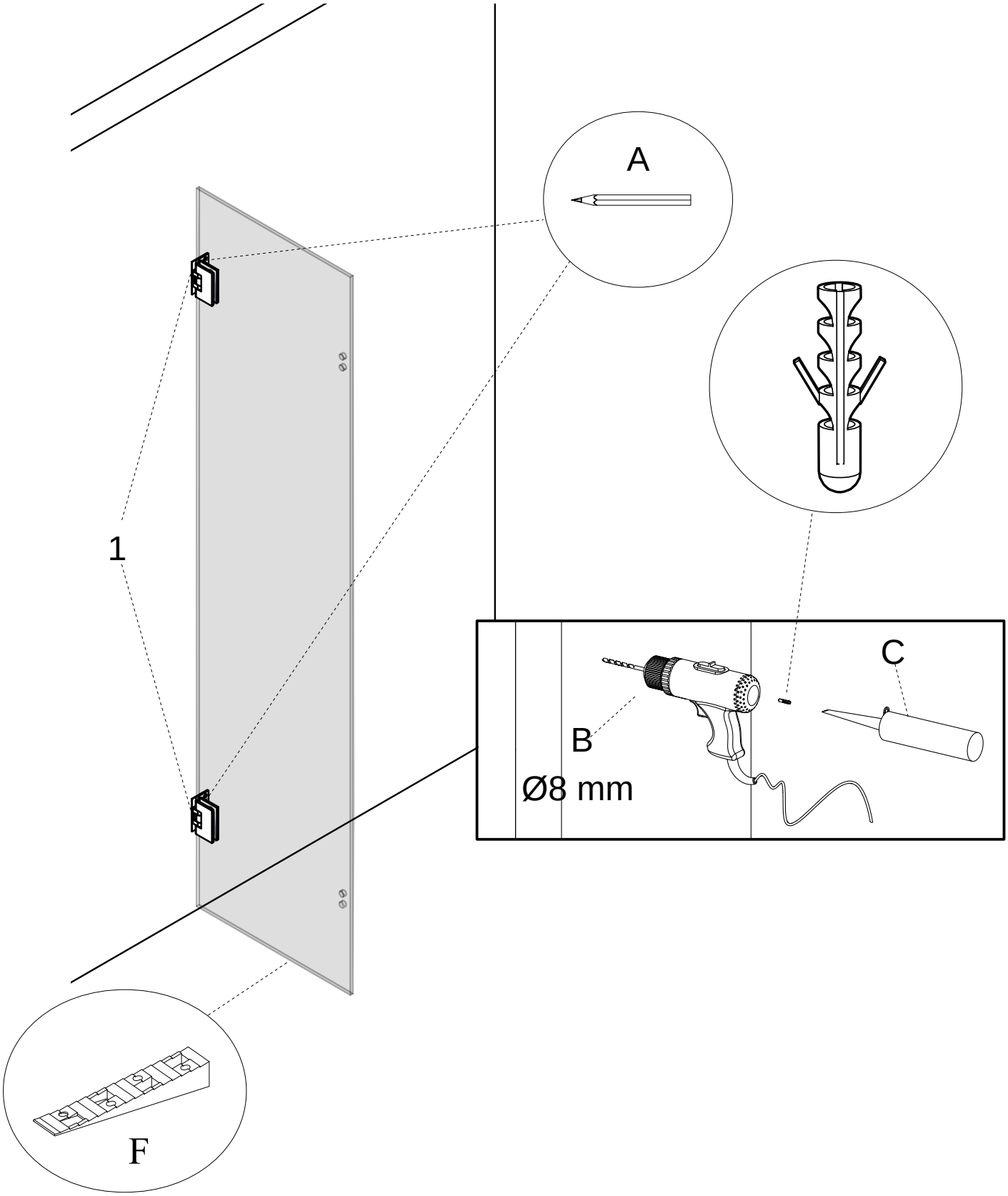

3

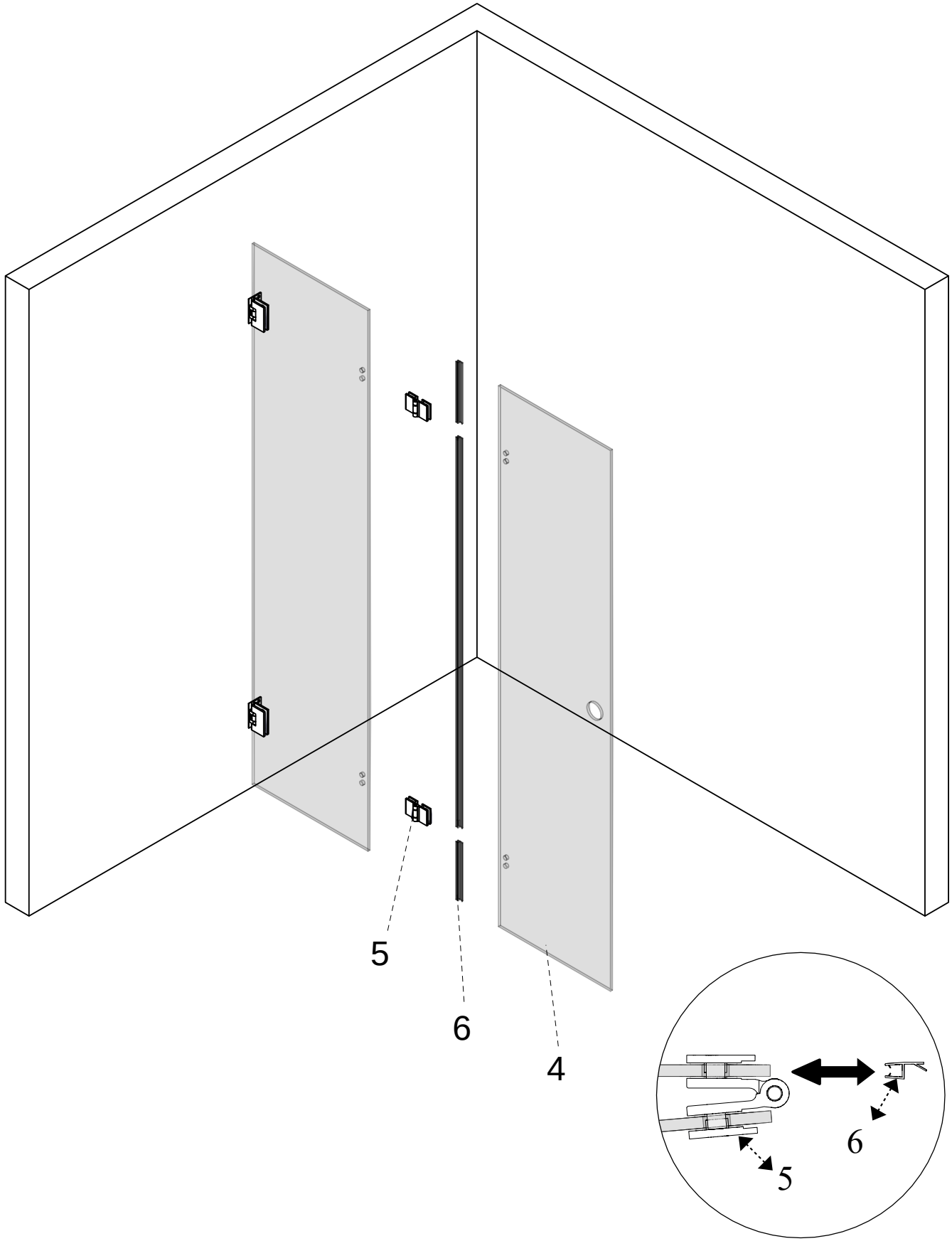

4

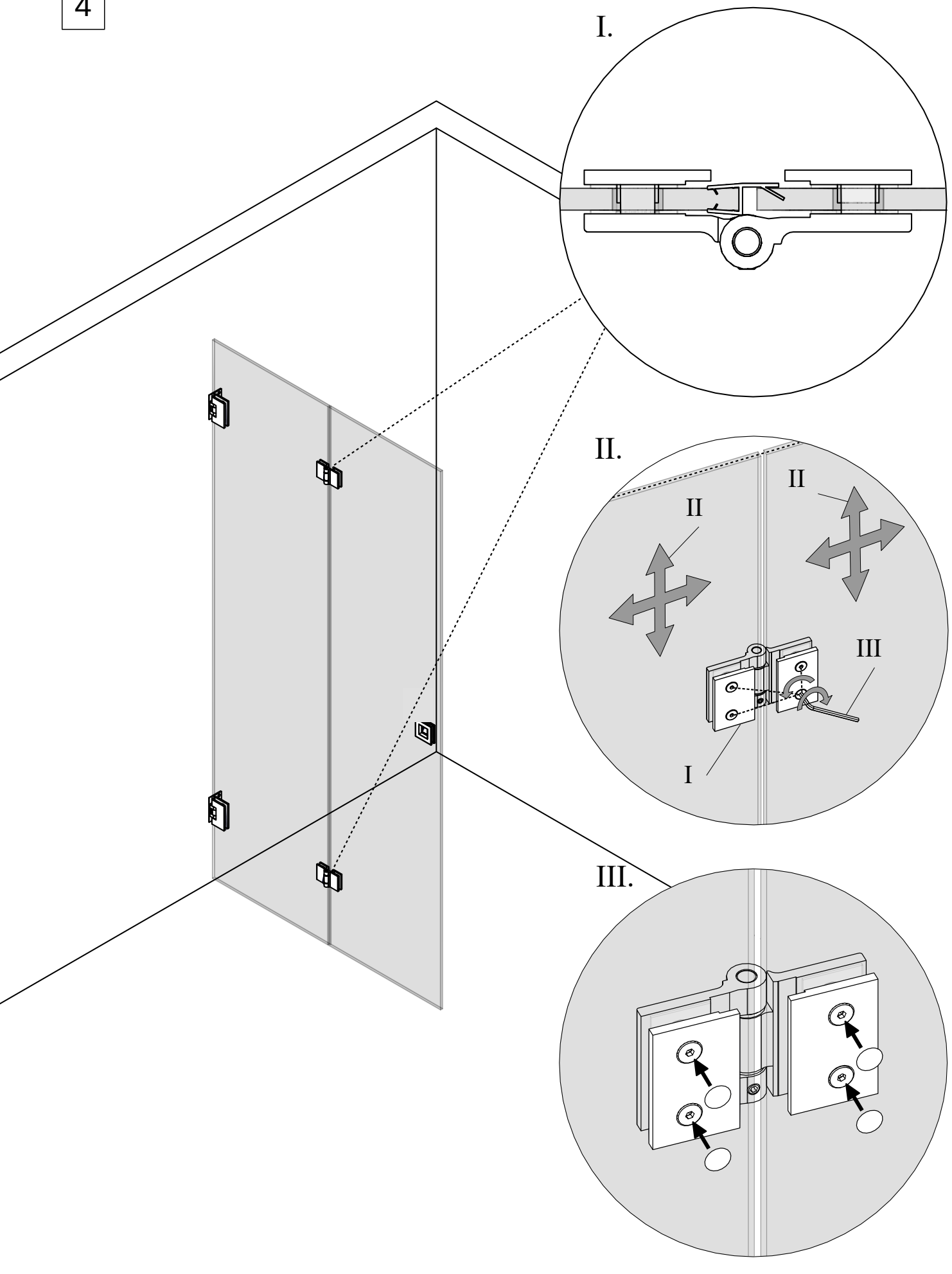

5

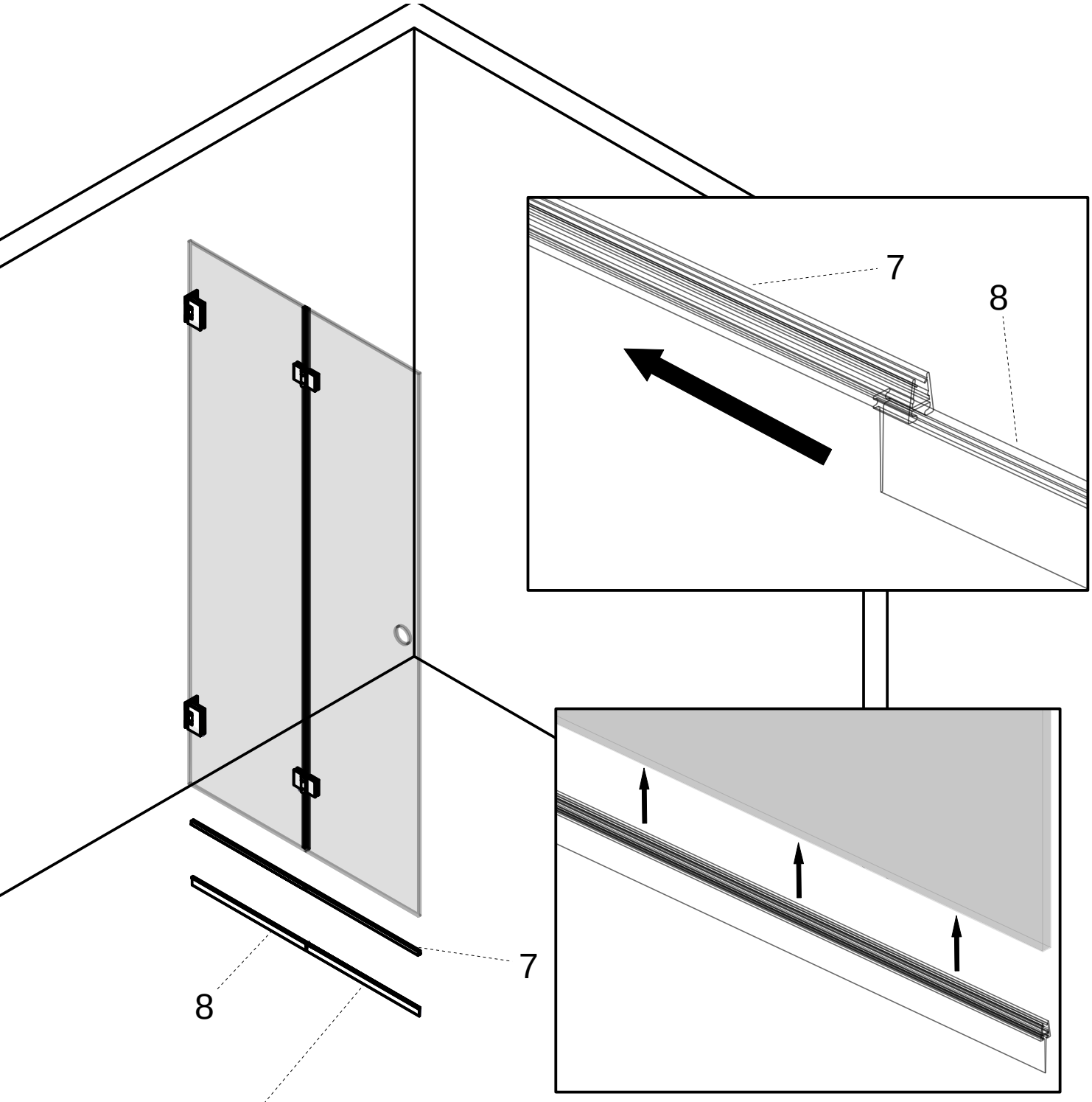

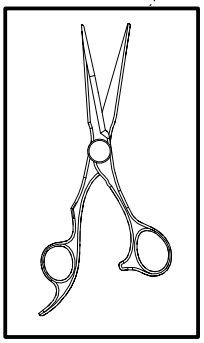

E

6

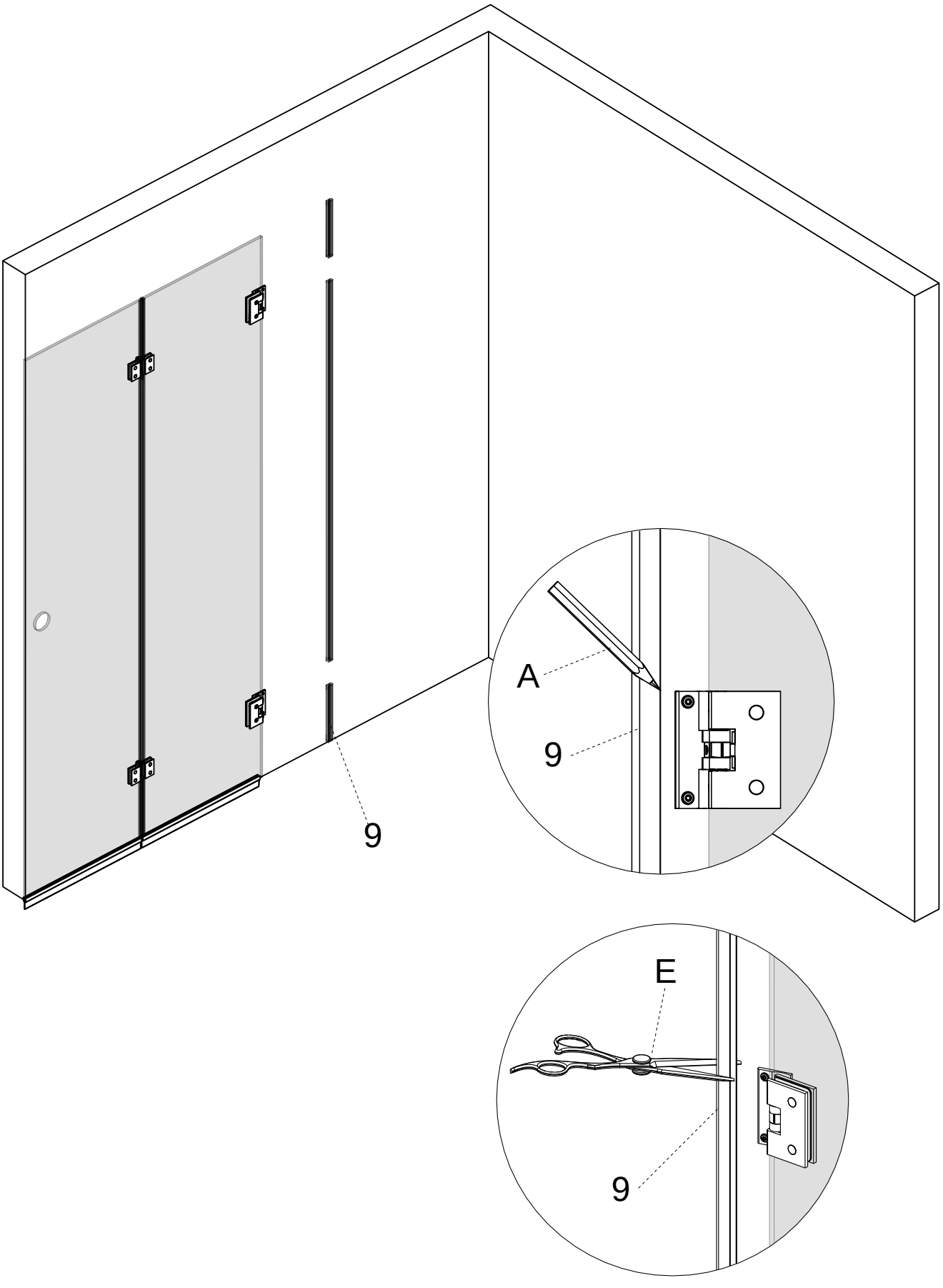

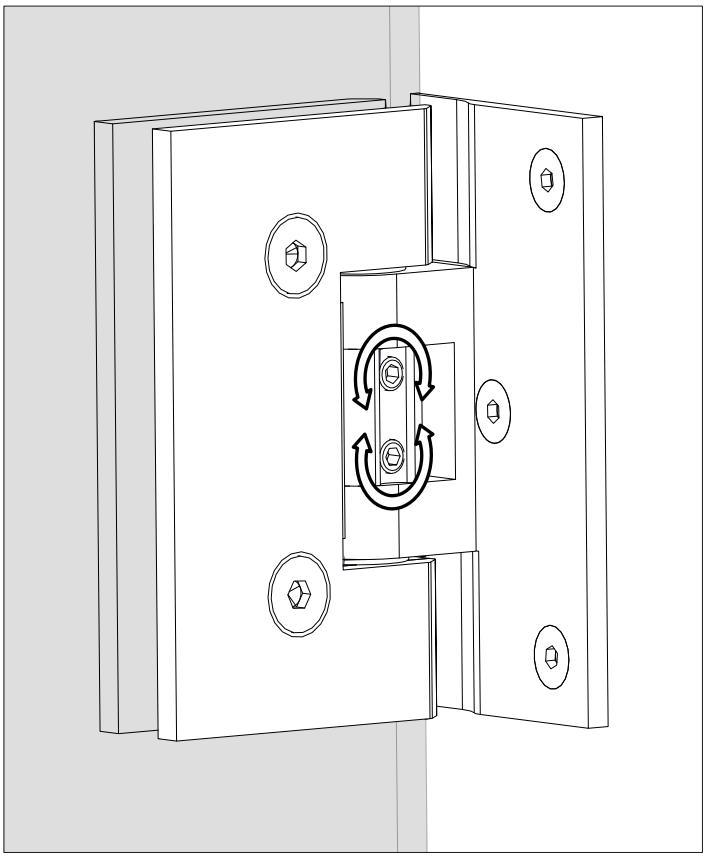

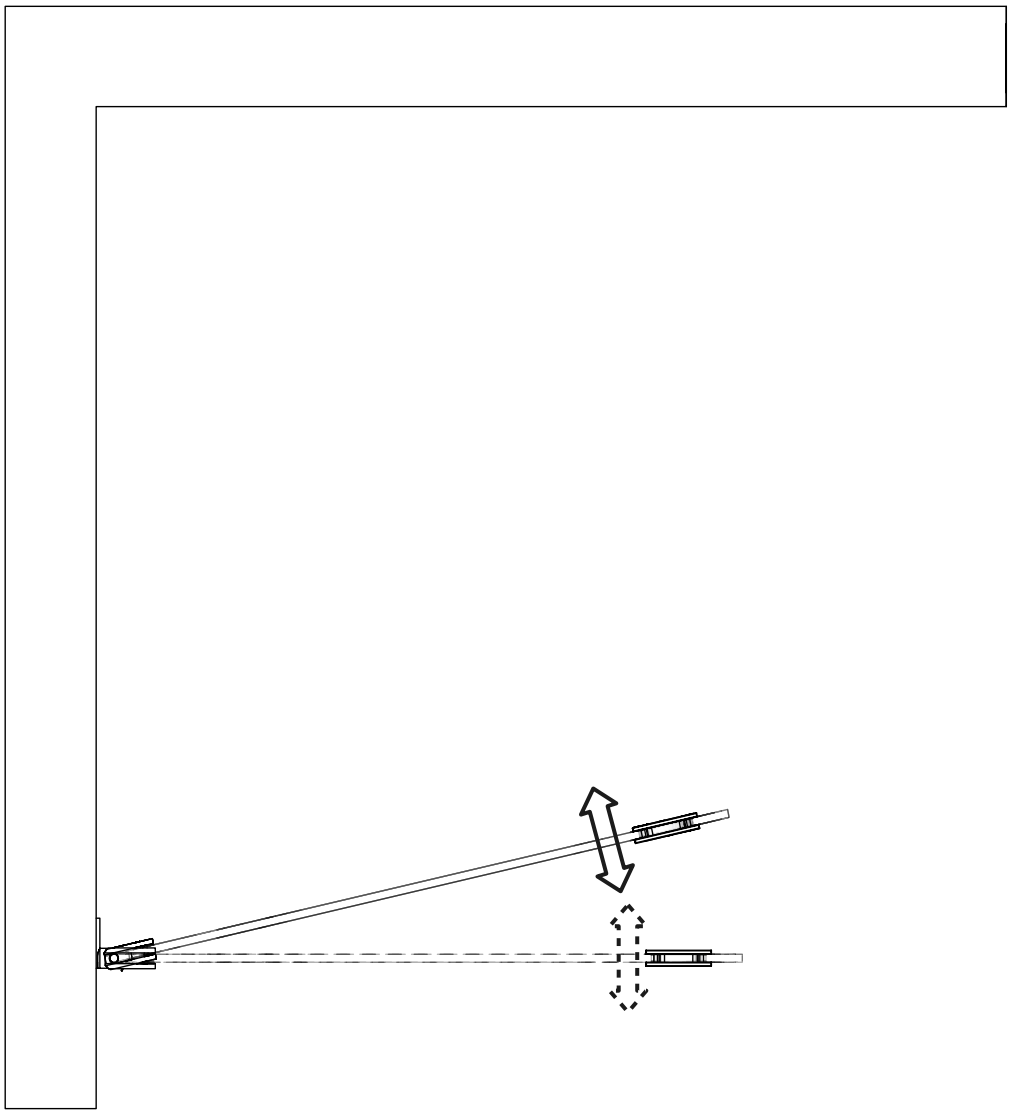

7

