PRODUCT SHEET

Certifications

EN 14428:2004+A1:2008

Material specifications
Frame: Aluminium alloy (AW-6063T5)
Glass: 6mm tempered glass, polished edges (EN-12150)

Roller mechanism: Stainless steel

Product options and product codes

Product key: 413 RL MMMM (standard sizes) / 473 RL MMMM (custom height)

For exact product code replace product key literals (R, L, MMMM) with selected codes below.

No handedness information needed.

Frame coating code (R)	Frame coating description			
6	RAL 9010 (white)			
7	Bright anodized			
8	Satin anodized			
9	RAL 9005 (black)			
Glass colour code (L)	**Glass colour description**			
1	Transparent			
2	Grey			
3	Chinchilla			
6	Milkwhite (satin)			
Size code (M)	**Width (mm)**	**Width (mm)**	**Standard height (mm) 413 -series**	**Max. custom height (mm) 473 -series**
7080	700	800	1950	2300
7085	700	850	1950	2300
7090	700	900	1950	2300
7580	750	800	1950	2300
7585	750	850	1950	2300
7590	750	900	1950	2300
8080	800	800	1950	2300
8085	800	850	1950	2300
8090	800	900	1950	2300
8585	850	850	1950	2300
8590	850	900	1950	2300
9090	900	900	1950	2300

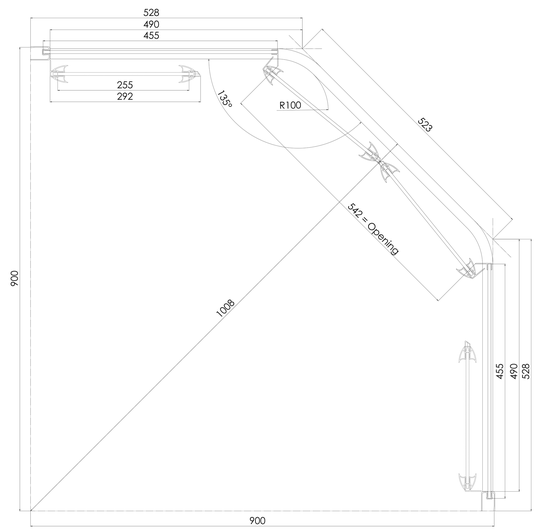

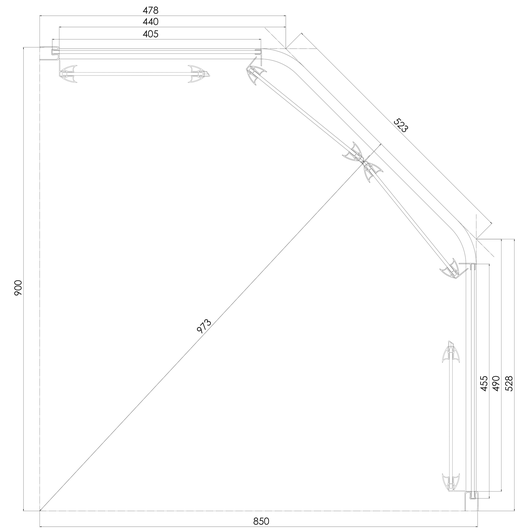

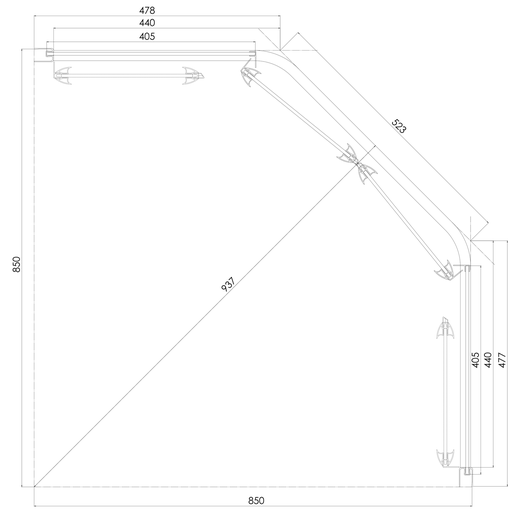

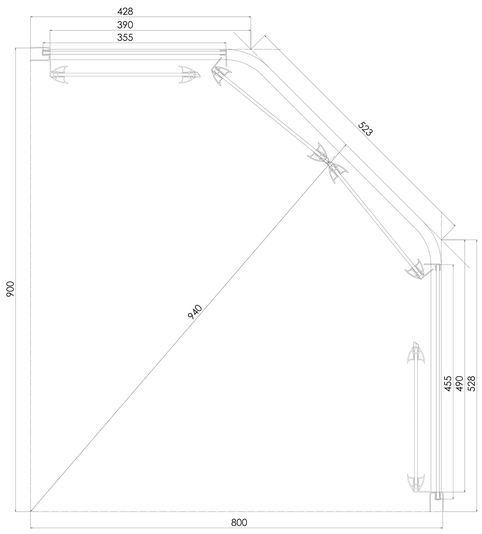

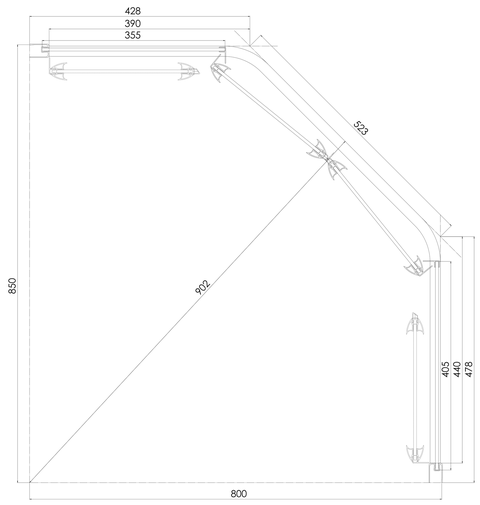

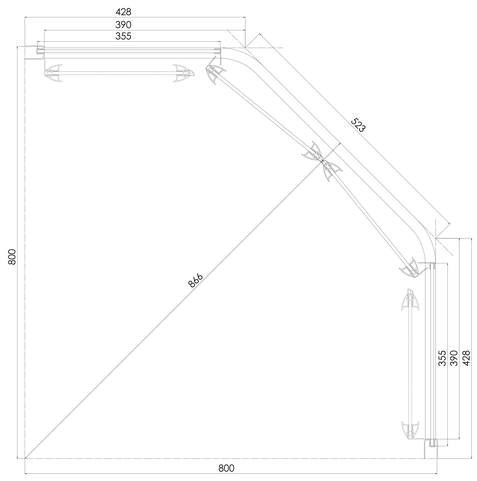

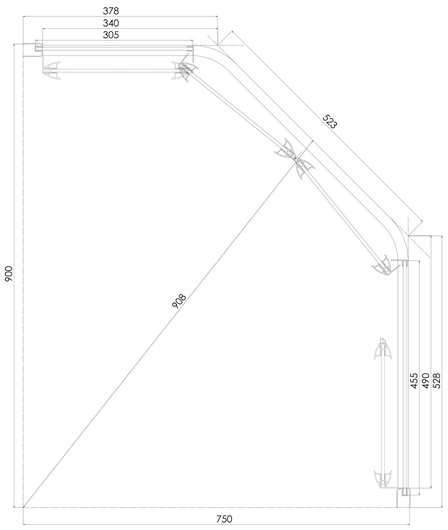

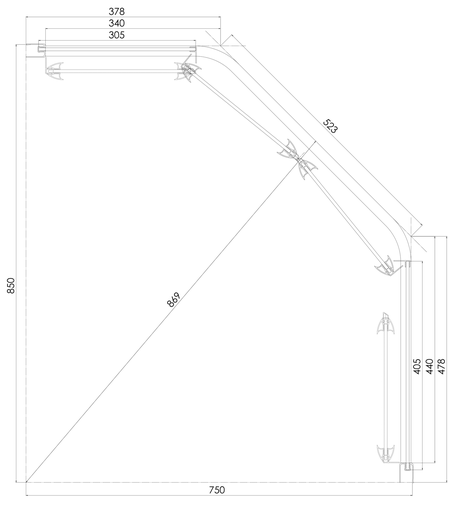

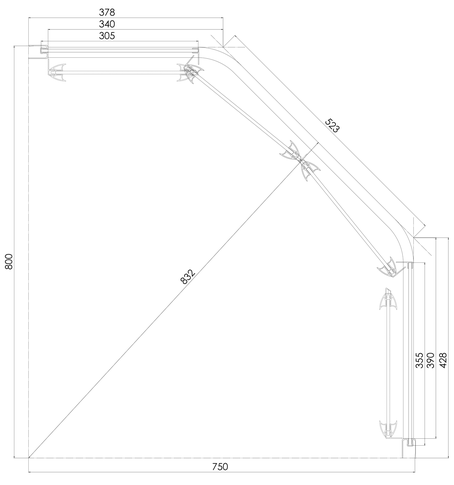

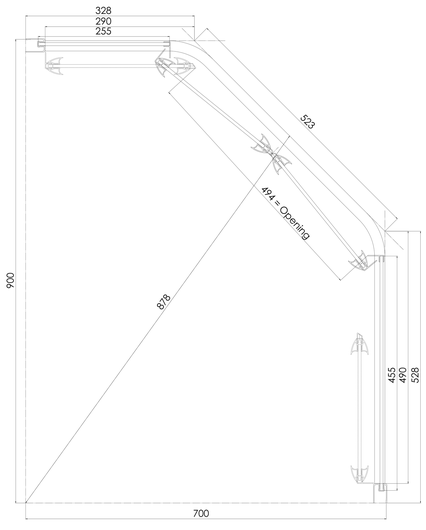

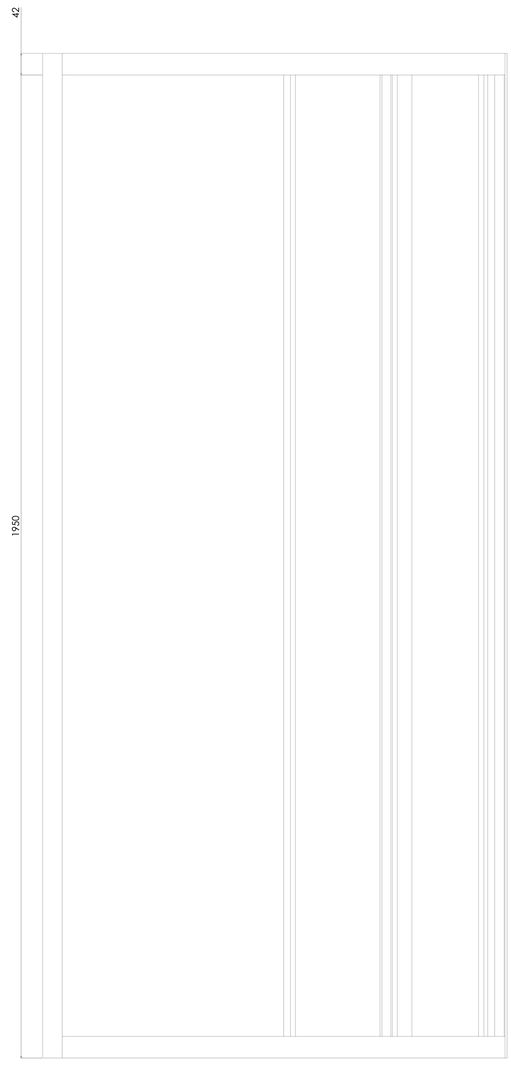

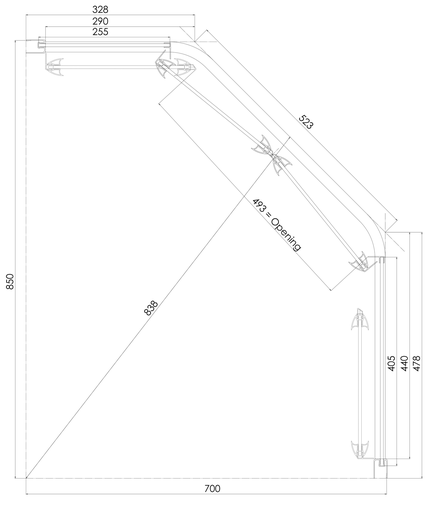

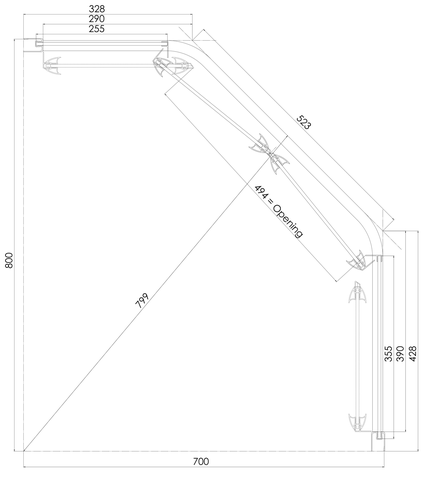

Wall-mount system

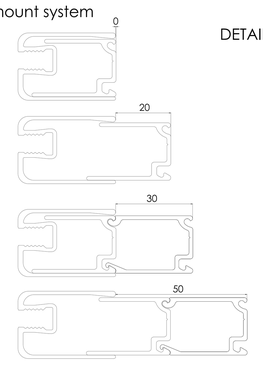

DETAILS

Floor installation with polyethene seal. Included in product

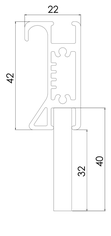

Floor installation with tuning legs. Included in product

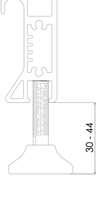

Handle profile

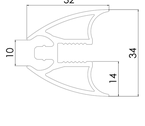

HIETAKARI

INFINIA 413 Ev.4

Date: 11.12.2013	Drawn: Autio
Verify: Lahti	

CE

Hietakari Yhtymä Oy, Lehtismäentie 3
21100 Naantali, Finland
11
EN 14428:2008+A1