PRODUCT SHEET

Certifications

EN 14428:2004+A1:2008

Material specifications
Frame: Aluminium alloy (AW-6063T5)
Glass: 6mm tempered glass, polished edges (EN-12150)

Roller mechanism: Stainless steel

Product options and product codes

Product key: 411 RL MMMM (standard sizes) / 471 RL MMMM (custom height)

For exact product code replace product key literals (R, L, MMMM) with selected codes below.

No handedness information needed.

Frame coating code (R)	Frame coating description			
6	RAL 9010 (white)			
7	Bright anodized			
8	Satin anodized			
9	RAL 9005 (black)			
Glass colour code (L)	**Glass colour description**			
1	Transparent			
2	Grey			
3	Chinchilla			
6	Milkwhite (satin)			
Size code (MM)	**Width (mm)**	**Width (mm)**	**Standard height (mm) 411-series**	**Max. custom height (mm) 471-series**
6868	680	680	1950	2300
6873	680	730	1950	2300
6883	680	780	1950	2300
6883	680	830	1950	2300
6888	680	880	1950	2300
7373	730	730	1950	2300
7378	730	780	1950	2300
7383	730	830	1950	2300
7388	730	880	1950	2300
7878	780	780	1950	2300
7883	780	830	1950	2300
7888	780	880	1950	2300
8383	830	830	1950	2300
8388	830	880	1950	2300
9090	880	880	1950	2300

TOP VIEW

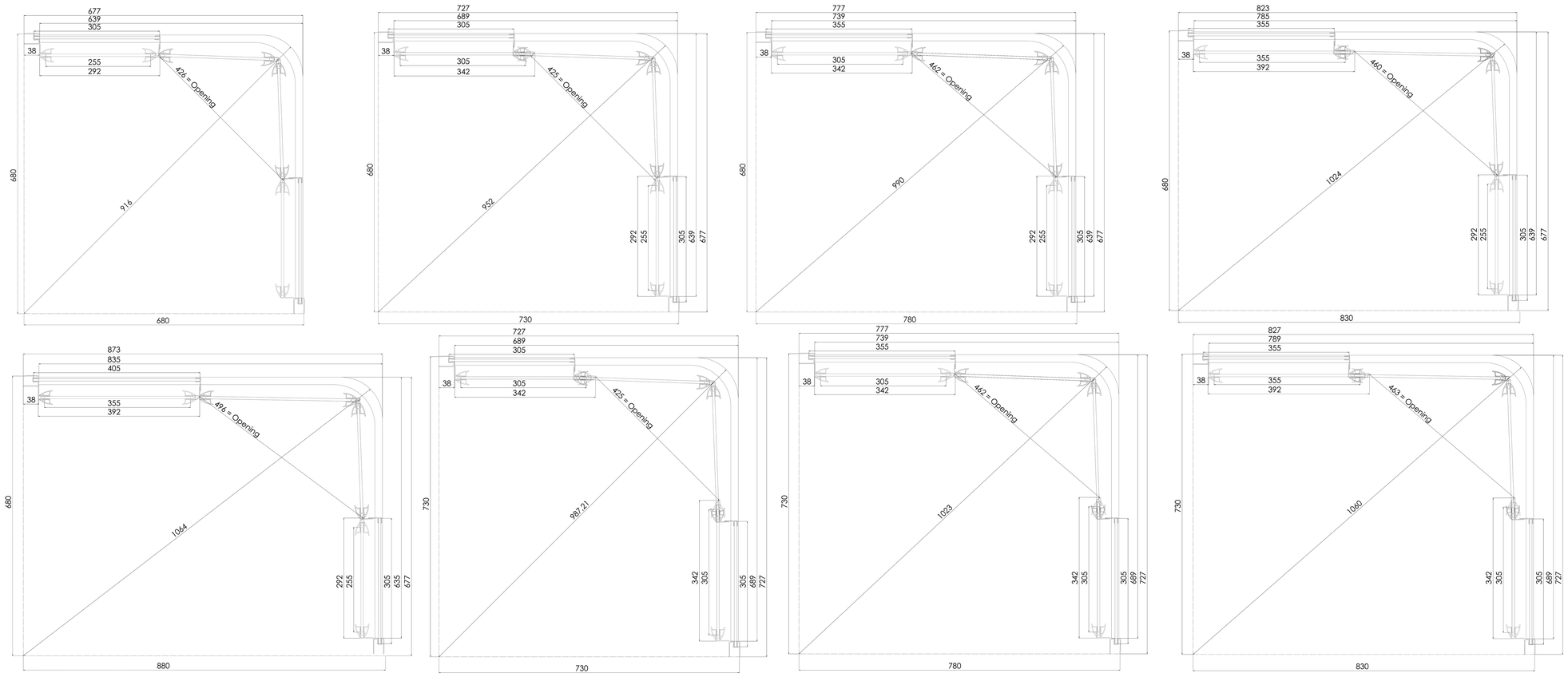

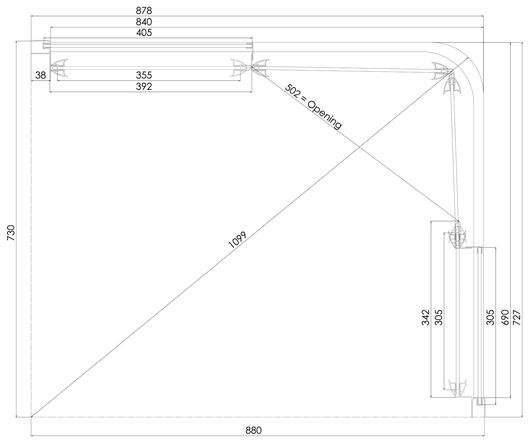

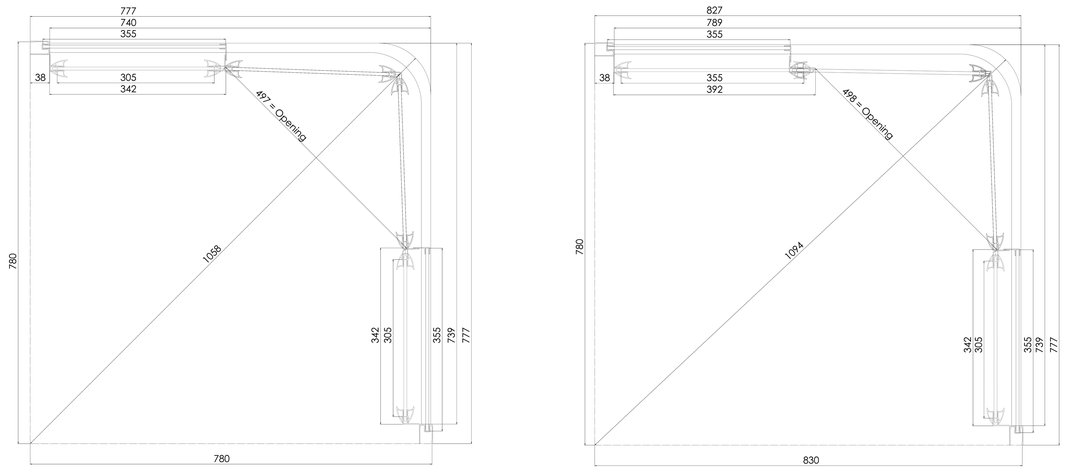

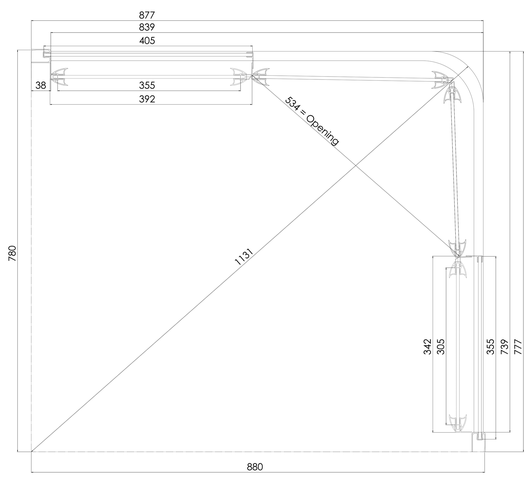

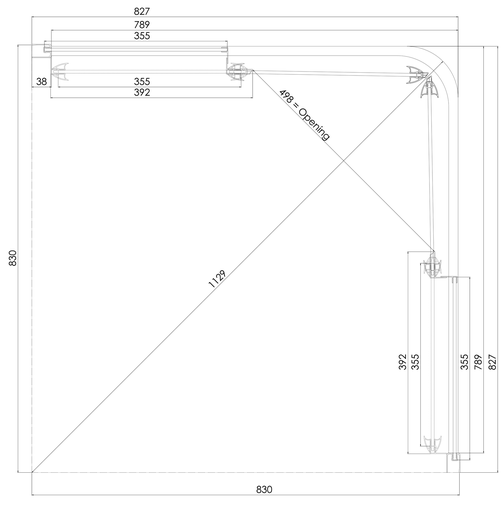

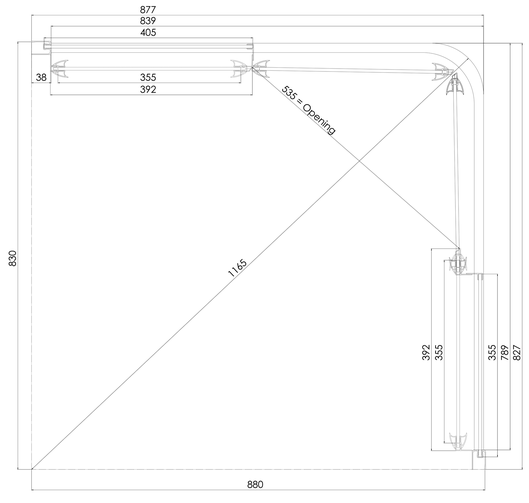

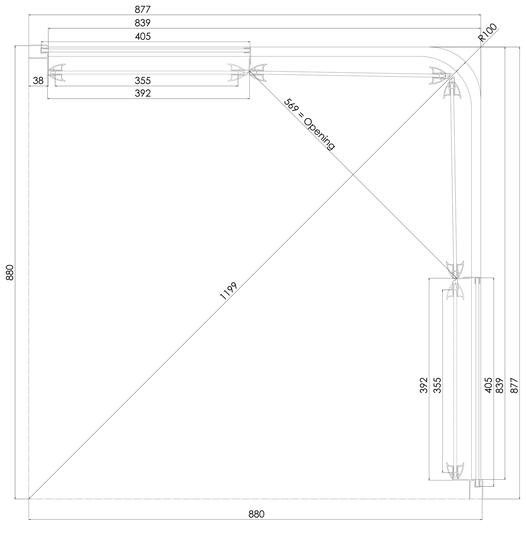

FACADE VIEW

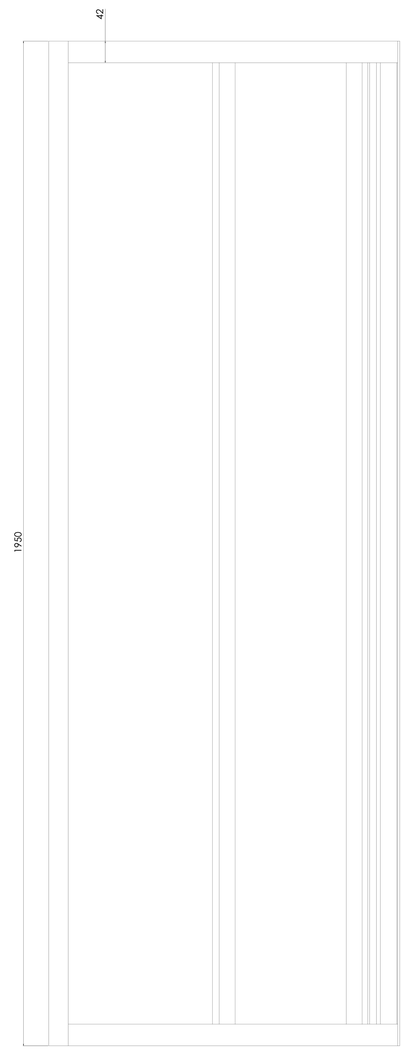

DETAILS

Wall-mount system

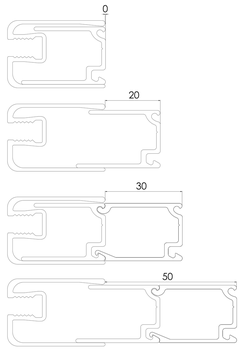

Floor installation with polyethene seal. Included in product

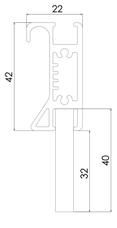

Floor installation with tuning legs. Included in product

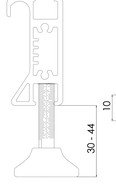

Handle profile

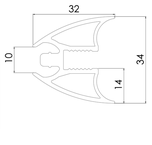

HIETAKARI

INFINIA 411 Ev.4

Date: 4.12.2013	Drawn: Autio
Verify: Lahti	

CE

Hietakari-Yhtymä Oy, Lehtisimäentie 3
21100 Naantali, Finland
13
EN 14428:2008+A1