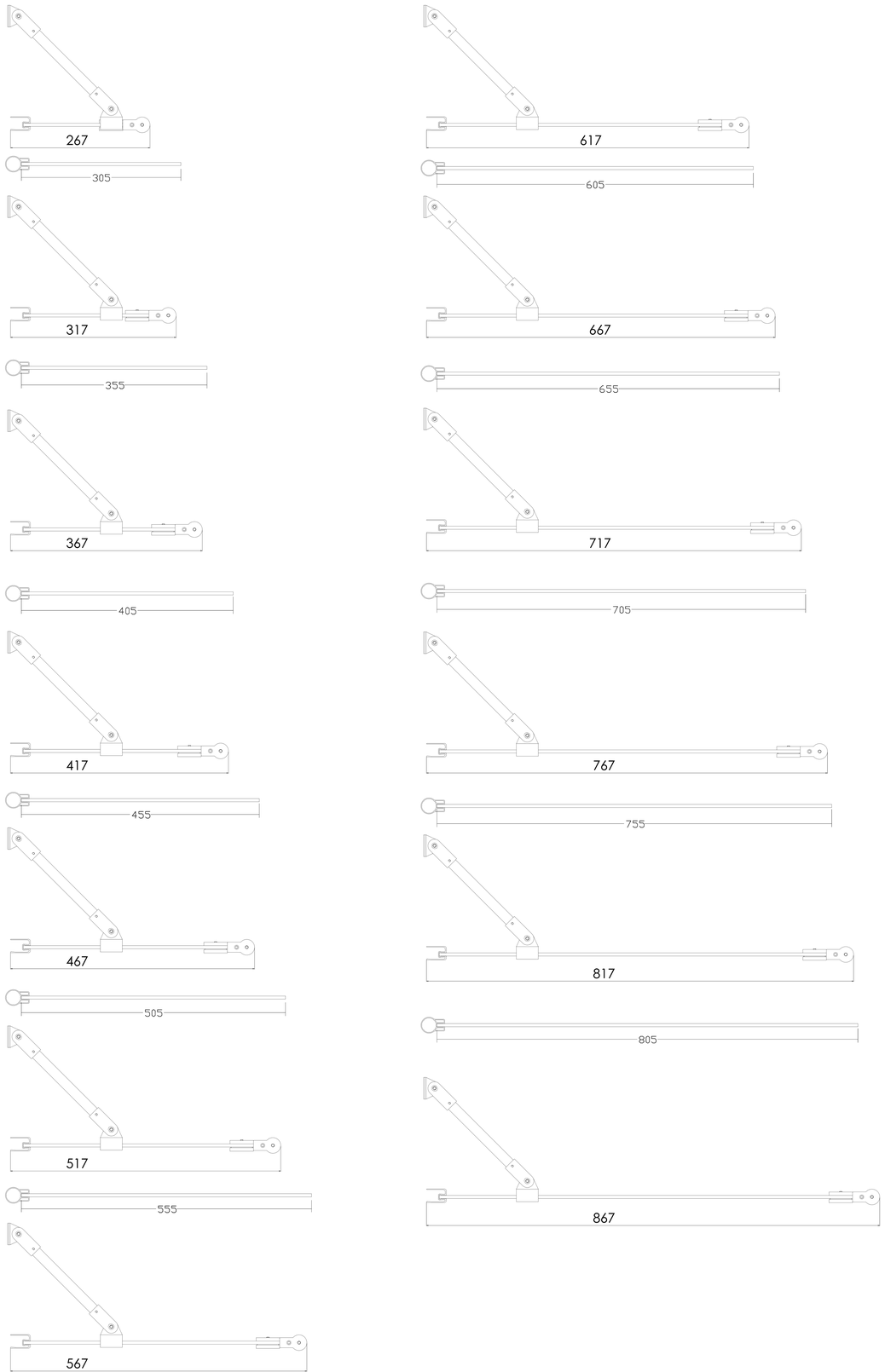

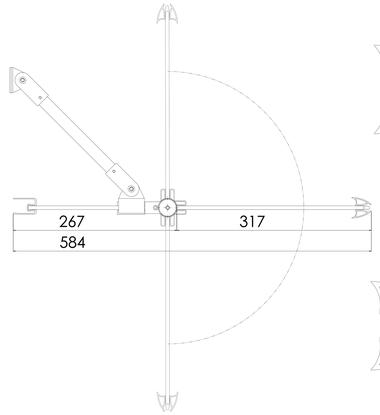

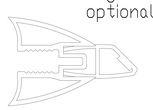

Magnet seal.Included in shower corner, optional for single shower wall.

Floor seal.Included in all variations.

Handle profile.Included in shower corner, optional for single shower wall.

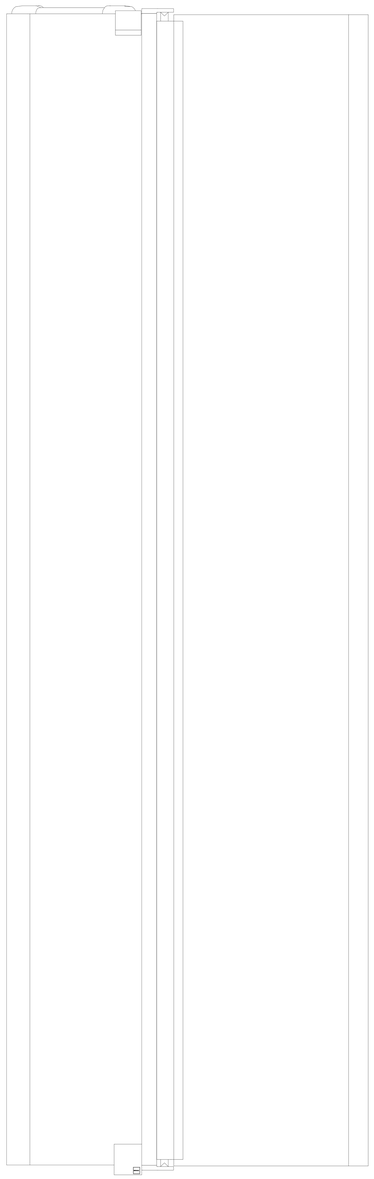

PRODUCT SHEET

Certifications

EN 14428:2004+A1:2008

Material specifications

Frame: Aluminium alloy (AW-6063T5)

Glass: 6mm tempered glass, polished edges (EN-12150)

Glass fittings: Chromed brass

Product options and product codes

Product key: 214 RL MMMM (standard sizes) / 274 RL MMMM (custom height)

For exact product code replace product key literals (R, L, MMMM) with selected codes below.

Product can be combined with other Infinia 21x-products.

Frame coating code (R)	Frame coating description
6	RAL 9010 (white)
7	Bright anodized
8	Satin anodized
9	RAL 9005 (black)

Glass colour code (L)	Glass colour description
1	Transparent
2	Grey
3	Chinchilla
6	Milkwhite (satin)

Single wall size (h = 1894), M = fixed part, N = swinging part

(M)(N)	27	32	37	42	47	52	57	62	67	72	77	82	87	Standard height (mm) 214 -series	Max. custom height (mm) 274 -series
30	57	62	67	72	77	82	87	92	97	102	107	112	117	1900	2300
35	62	67	72	77	82	87	92	97	102	107	112	117	122	1900	2300
40	67	72	77	82	87	92	97	102	107	112	117	122	127	1900	2300
45	72	77	82	87	92	97	102	107	112	117	122	127	132	1900	2300
50	77	82	87	92	97	102	107	112	117	122	127	132	137	1900	2300
55	82	87	92	97	102	107	112	117	122	127	132	137	142	1900	2300
60	87	92	97	102	107	112	117	122	127	132	137	142	147	1900	2300
65	92	97	102	107	112	117	122	127	132	137	142	147	152	1900	2300
70	97	102	107	112	117	122	127	132	137	142	147	152	157	1900	2300
75	102	107	112	117	122	127	132	137	142	147	152	157	162	1900	2300
80	107	112	117	122	127	132	137	142	147	152	157	162	167	1900	2300

Shower corner side size (h = 1894), M = fixed part, N = swinging part

(M)(N)	27	32	37	42	47	52	57	62	67	72	77	82	87	Standard height (mm) 214 -series	Max. custom height (mm) 274 -series
30	NA	65	70	75	80	85	90	95	100	105	110	115	120	1900	2300
35	65	70	75	80	85	90	95	100	105	110	115	120	125	1900	2300
40	70	75	80	85	90	95	100	105	110	115	120	125	130	1900	2300
45	75	80	85	90	95	100	105	110	115	120	125	130	135	1900	2300
50	80	85	90	95	100	105	110	115	120	125	130	135	140	1900	2300
55	85	90	95	100	105	110	115	120	125	130	135	140	145	1900	2300
60	90	95	100	105	110	115	120	125	130	135	140	145	150	1900	2300
65	95	100	105	110	115	120	125	130	135	140	145	150	155	1900	2300
70	100	105	110	115	120	125	130	135	140	145	150	155	160	1900	2300
75	105	110	115	120	125	130	135	140	145	150	155	160	165	1900	2300
80	110	115	120	125	130	135	140	145	150	155	160	165	170	1900	2300

	NAME	DATE
DRAWN	Autio	04/30/12
CHECKED		
ENG APPR		
MGR APPR		

Hietakari-Yhtymä Oy

TITLE

INFINIA 214

SIZE 214 RLM REV

FILE NAME: Infinia 214.dft

SCALE: WEIGHT: SHEET 1 OF 2