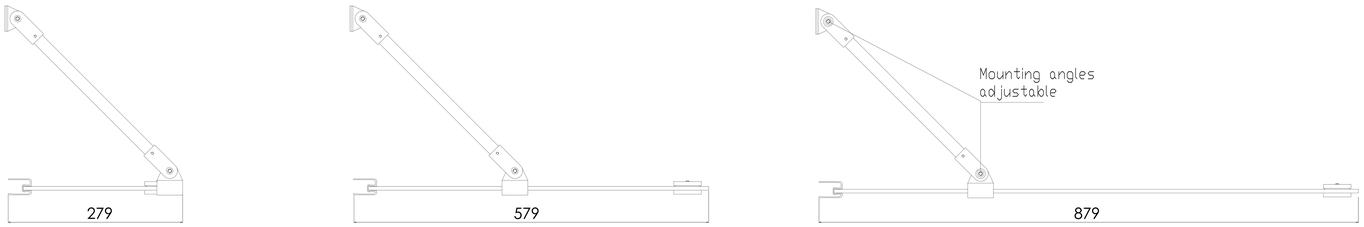

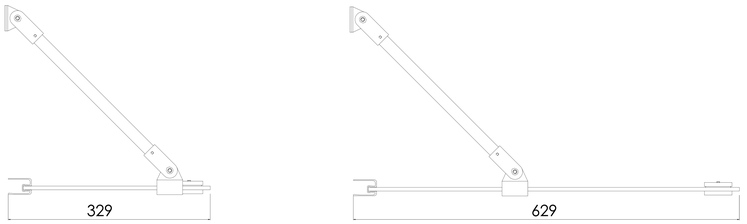

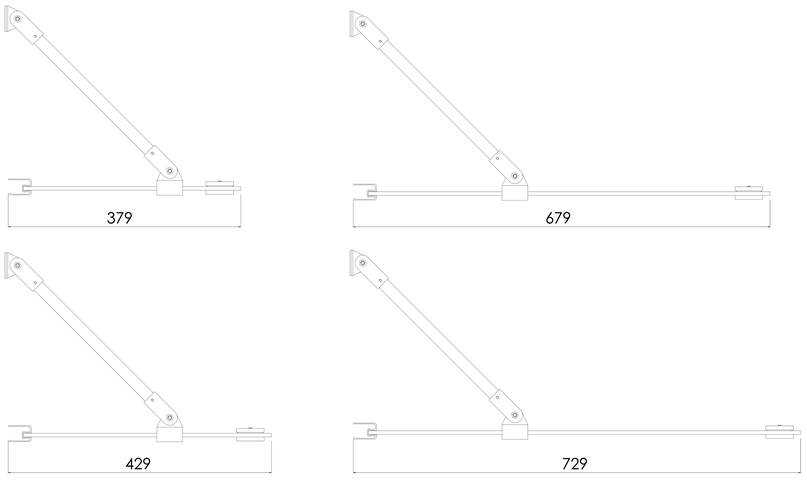

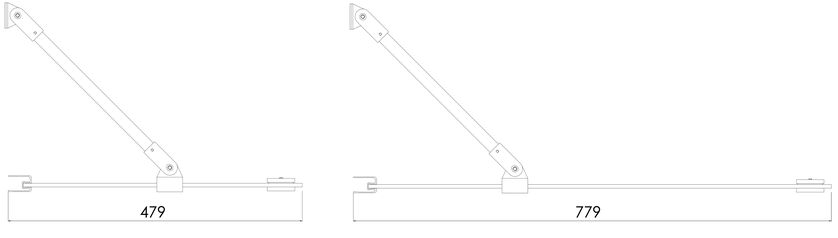

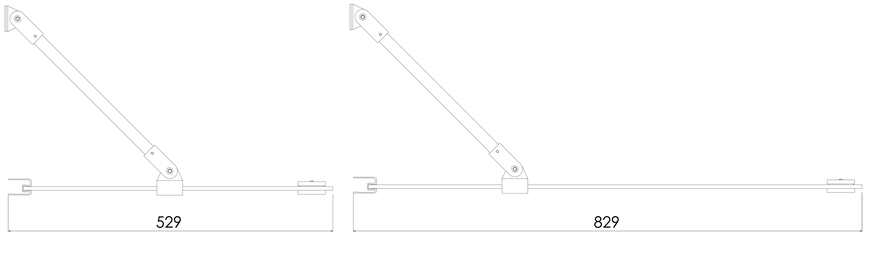

PRODUCT SHEET

Certifications

EN 14428:2004+A1:2008

Material specifications
Frame: Aluminium alloy (AW-6063T5)
Glass: 6mm tempered glass, polished edges (EN-12150)

Glass fittings: Chromed brass

Product options and product codes

Product key: 211 RL MMMM (standard sizes) / 271 RL MMMM (custom height)

For exact product code replace product key literals (R, L, MMMM) with selected codes below.

Product can be combined with other Infinia 21x-products.

Frame coating code (R)	Frame coating description			
6	RAL 9010 (white)			
7	Bright anodized			
8	Satin anodized			
9	RAL 9005 (black)			
Glass colour code (L)	**Glass colour description**			
1	Transparent			
2	Grey			
3	Chinchilla			
6	Milkwhite (satin)			
Size code (M)	**Single wall width(mm)**	**Shower corner width (mm)**	**Standard height (mm) 211 -series**	**Max. custom height (mm) 271 -series**
0023	229	NA	1877	2300
0028	279	NA	1877	2300
0033	329	NA	1877	2300
0038	379	NA	1877	2300
0043	429	NA	1877	2300
0048	479	NA	1877	2300
0053	529	NA	1877	2300
0058	579	NA	1877	2300
0063	629	660	1877	2300
0068	679	710	1877	2300
0073	729	760	1877	2300
0078	779	810	1877	2300
0083	829	860	1877	2300

	NAME	DATE
DRAWN	Autio	03/27/12
CHECKED		
ENG APPR		
MGR APPR		

Hietakari-Yhtymä Oy

TITLE SHOWER WALL INFINIA 211

SIZE | PRODUCT KEY 211 RLM | REV

FILE NAME: INFINIA 211.dft

SCALE: | WEIGHT: | SHEET 1 OF 1